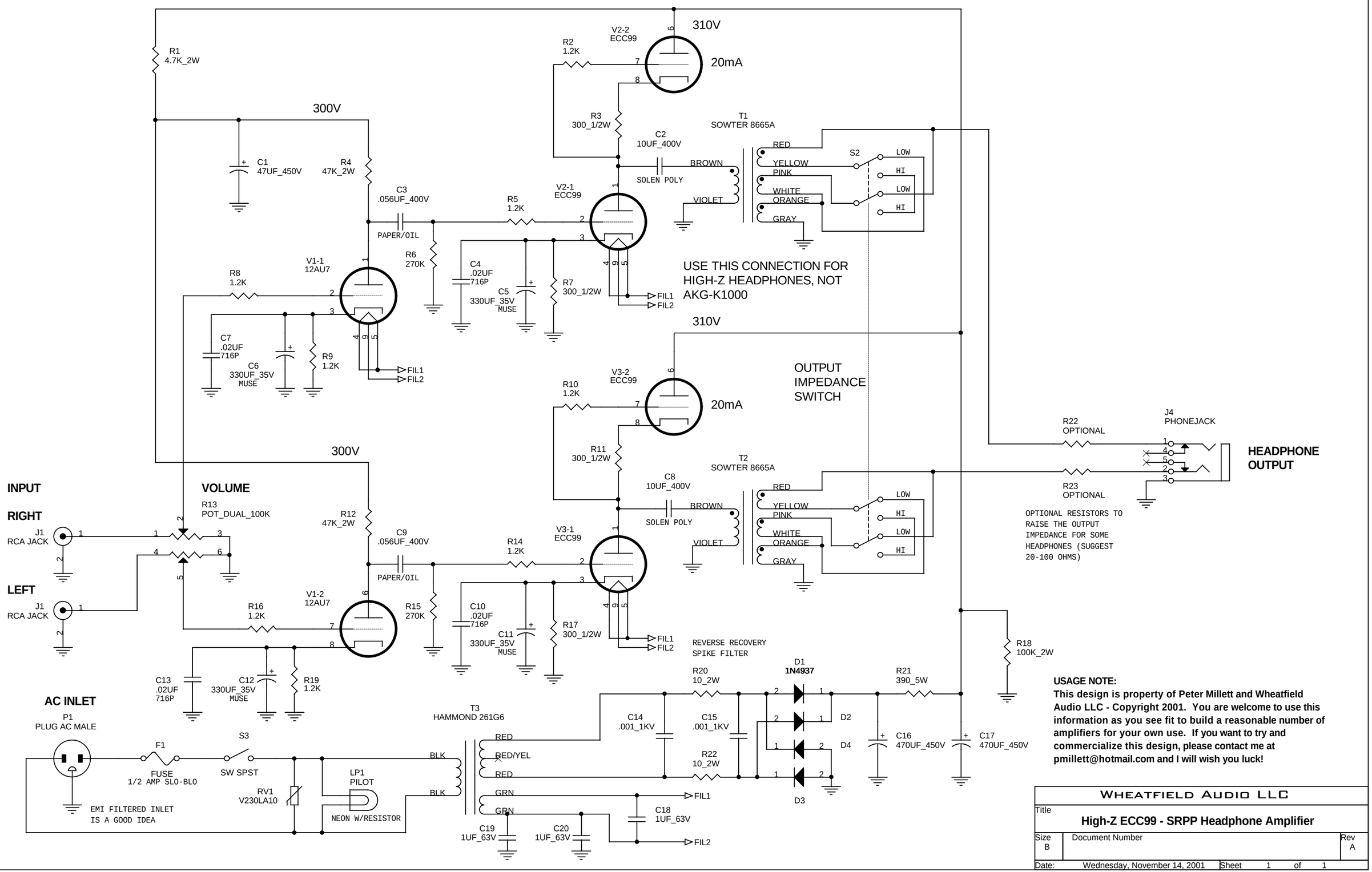

USAGE NOTE:
This design is property of Peter Millett and Wheatfield Audio LLC - Copyright 2001. You are welcome to use this information as you see fit to build a reasonable number of amplifiers for your own use. If you want to try and commercialize this design, please contact me at pmillett@hotmail.com and I will wish you luck!

WHEATFIELD AUDIO LLC		
Title: **High-Z ECC99 - SRPP Headphone Amplifier**		
Size B	Document Number	Rev A
Date: Wednesday, November 14, 2001	Sheet 1 of 1	