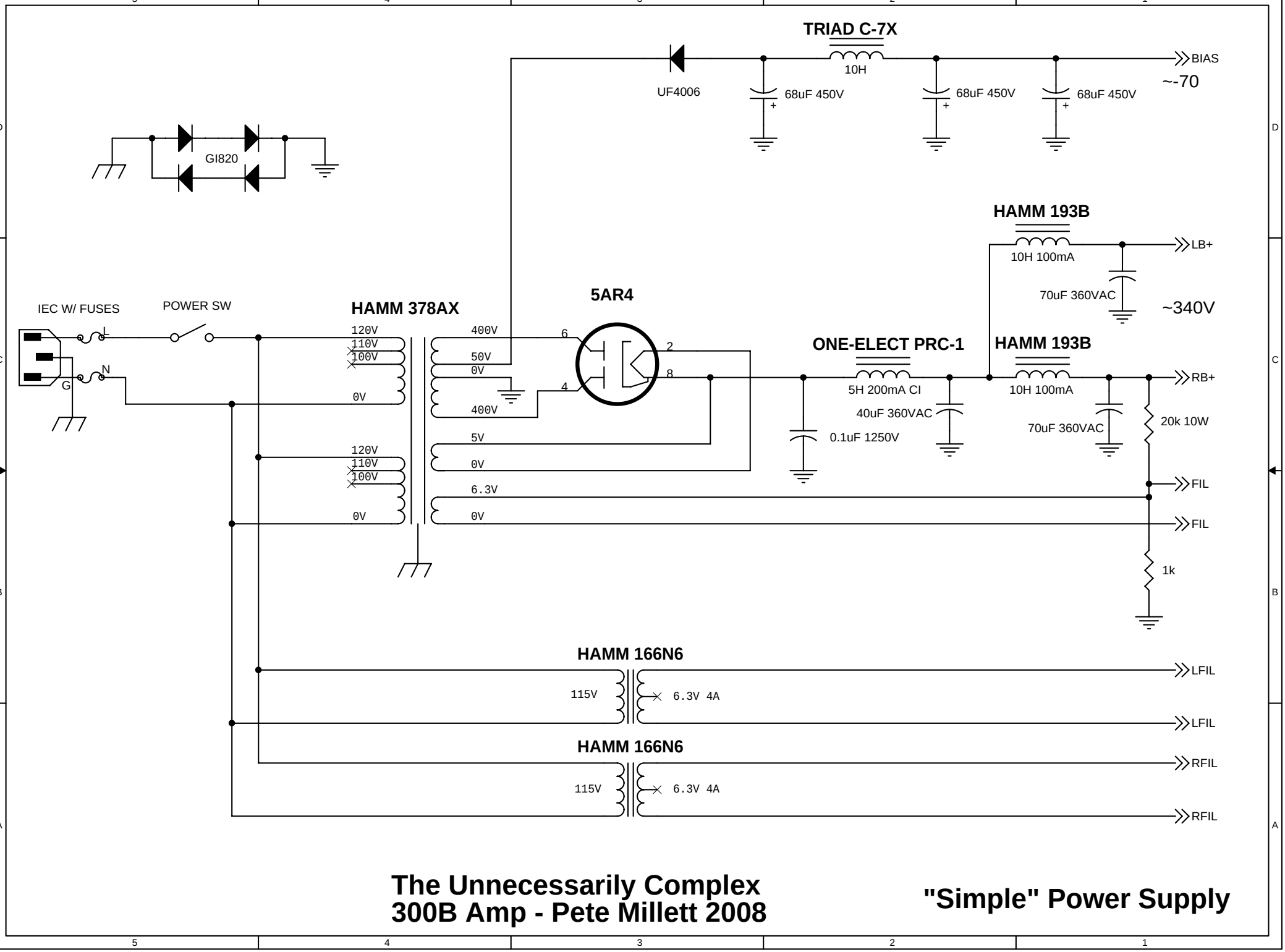

The Unnecessarily Complex 300B Amp - Pete Millett 2008

"Simple" Power Supply