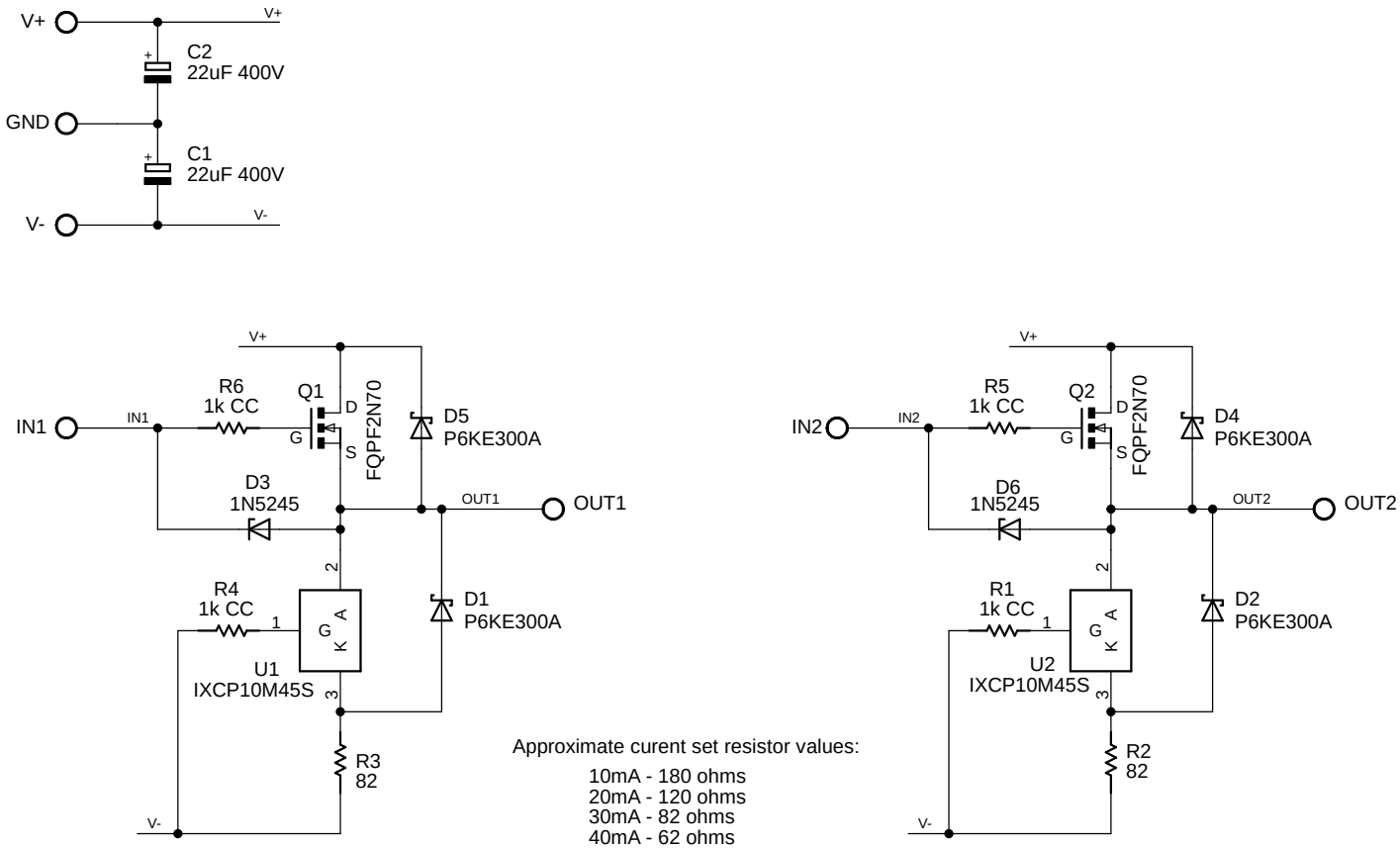

Approximate curent set resistor values:

10mA - 180 ohms
20mA - 120 ohms
30mA - 82 ohms
40mA - 62 ohms
50mA - 39 ohms

© 2013 Pete Millett
www.pmillett.com

A2 Driver

TITLE: sa2buf

Document Number:

REV:

Date: 1/16/2014 8:55:45 AM

Sheet: 1/1