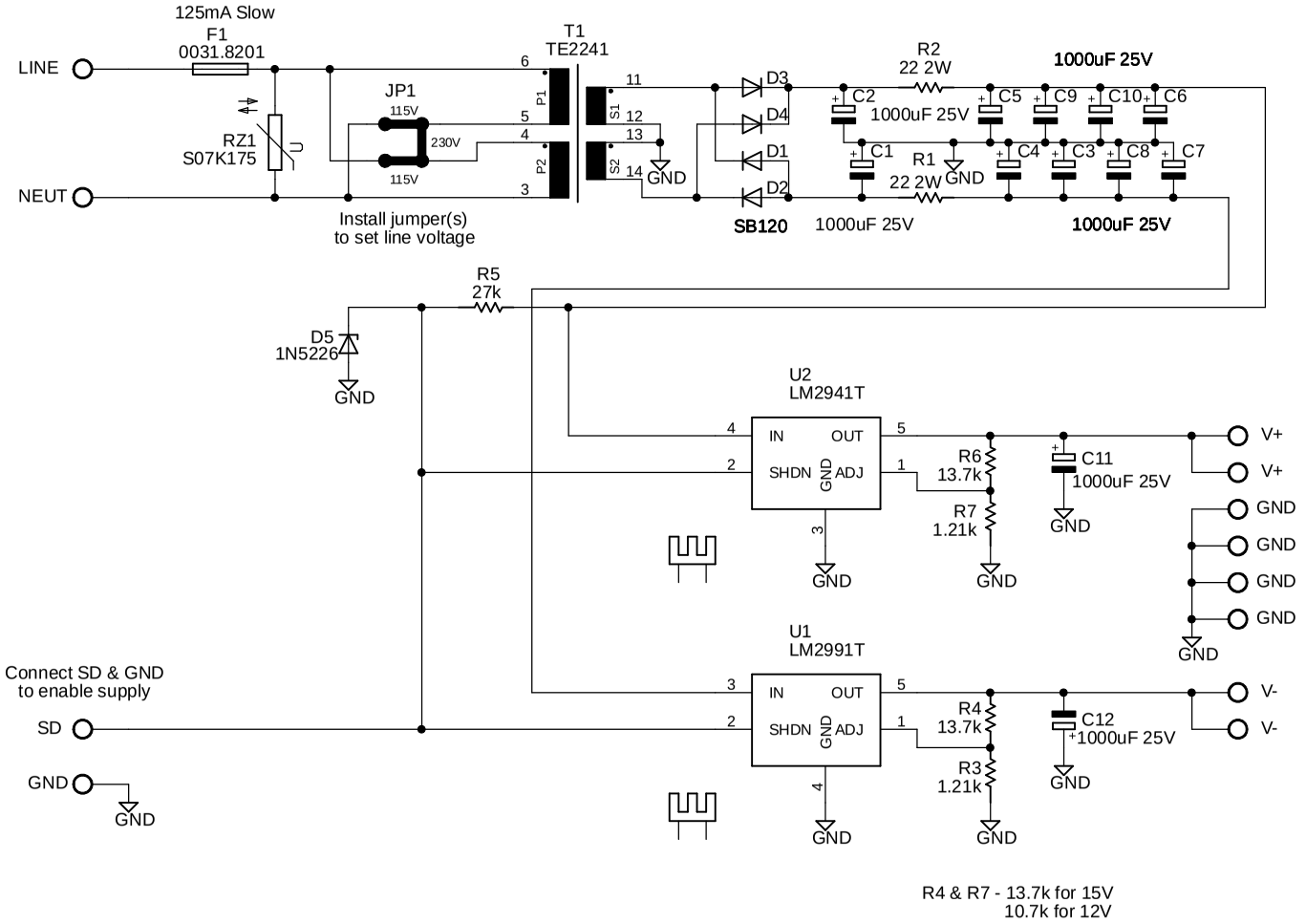

Bipolar Power Supply

www.pmillett.com

TITLE: OPPS	
Document Number:	REV:
Date: 8/24/2015 3:26:03 PM	Sheet: 1/1